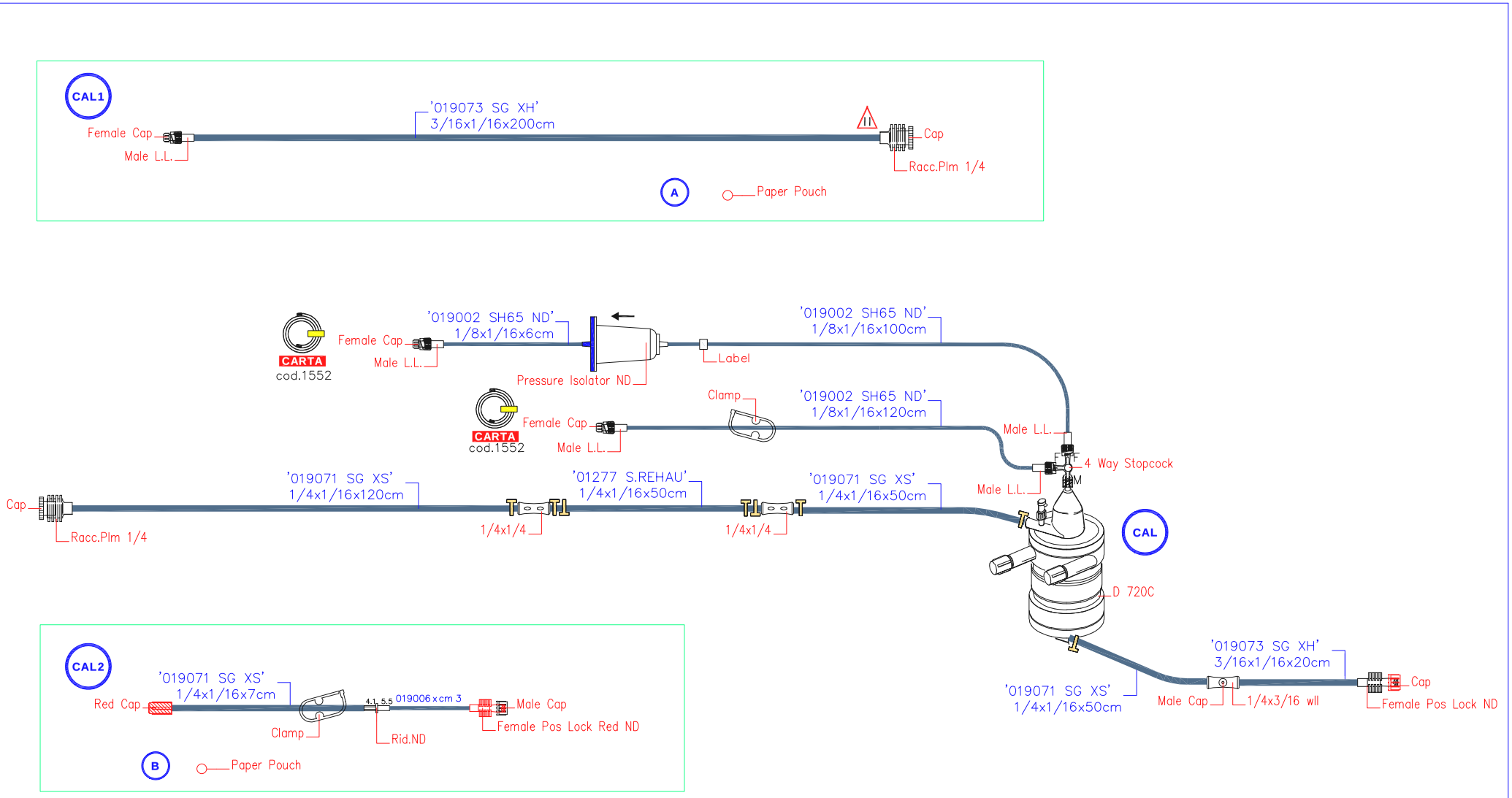
CAL1
Female Cap
Male L.L.
'019073 SG XH'
3/16x1/16x200cm
Cap
Racc.Plm 1/4
A
Paper Pouch
CARTA
cod.1552
Female Cap
Male L.L.
'019002 SH65 ND'
1/8x1/16x6cm
Pressure Isolator ND
Label
'019002 SH65 ND'
1/8x1/16x100cm
CARTA
cod.1552
Female Cap
Male L.L.
Clamp
'019002 SH65 ND'
1/8x1/16x120cm
Male L.L.
4 Way Stopcock
F
M
Male L.L.
Cap
Racc.Plm 1/4
'019071 SG XS'
1/4x1/16x120cm
1/4x1/4
'01277 S.REHAU'
1/4x1/16x50cm
1/4x1/4
'019071 SG XS'
1/4x1/16x50cm
CAL
D 720C
'019071 SG XS'
1/4x1/16x50cm
'019073 SG XH'
3/16x1/16x20cm
Male Cap
1/4x3/16 wll
Cap
Female Pos Lock ND
CAL2
Red Cap
'019071 SG XS'
1/4x1/16x7cm
Clamp
4.1
5.5
019006 x cm 3
Rid.ND
Male Cap
Female Pos Lock Red ND
B
Paper Pouch